SERIE E_N

The E_N series clamps use Hall-effect technology for the measurement of AC and DC currents from several milliamps to over 100 A.

These clamps' narrow, elongated design makes them ideal for measurements in cable bundles or in other confined areas like circuit boards, motor controls or motor vehicle electrical circuits.

Their low phase shifting also ensures excellent performance for power measurements.

These clamps have a voltage output (mv) and their ability to measure AC and DC signals is useful for true RMS measurements.

Model E6N is the most sensitive for low current measurements.

The E series clamps all make excellent work mates for multimeters, recorders and logging equipment, etc. Model E3N can even be connected directly to an oscilloscope.

Autorisierter Distributor

TVW Meßtechnik GmbH

TVW-App

TVW Meßtechnik GmbH
Semmelweg 31
32257 Bünde
Fon: 05223 / 9277 - 0
Fax: 05223 / 9277 - 40
info@tvwbuende.de
www.tvwbuende.de

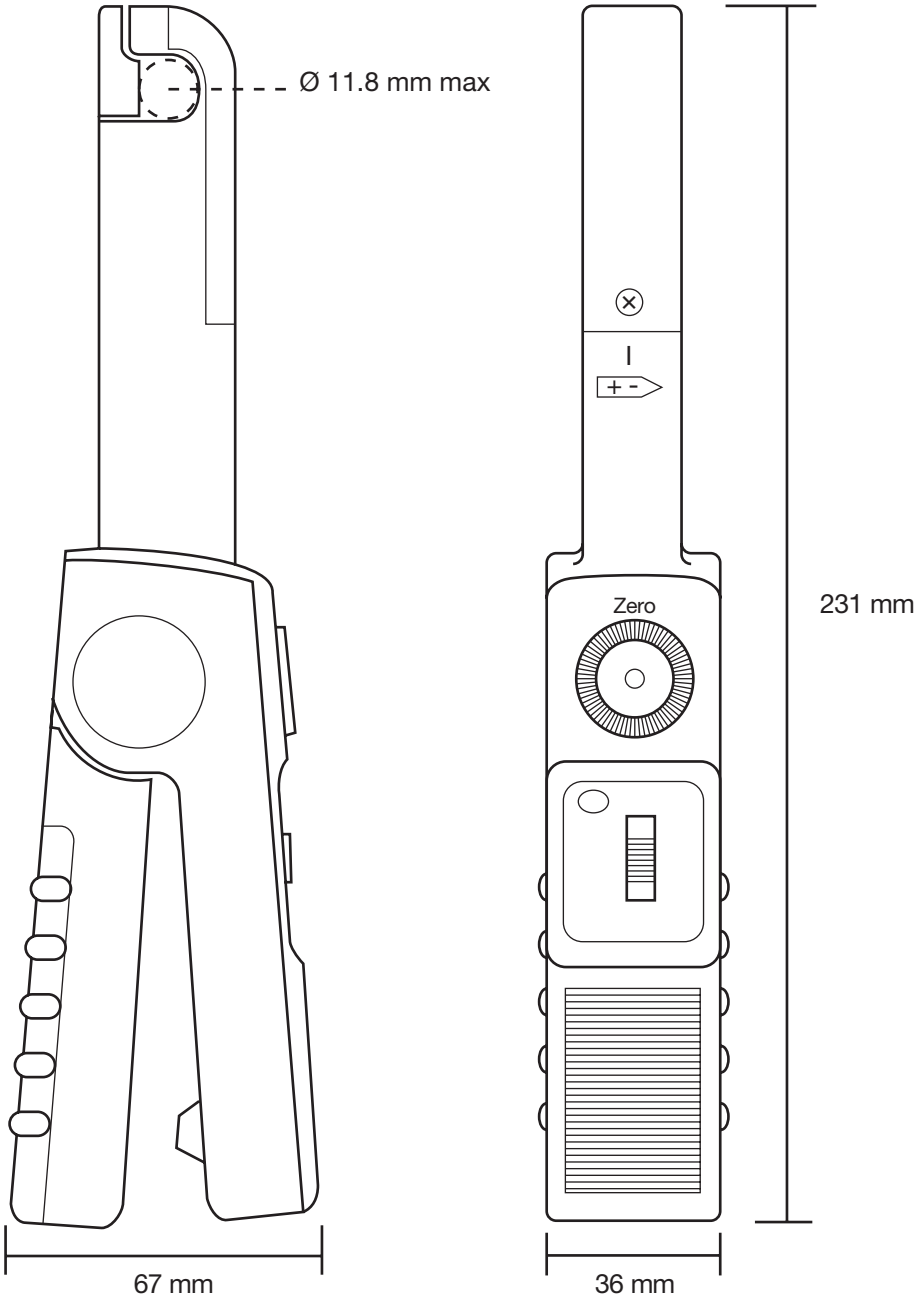

TVW Meßtechnik GmbH
TVW-App
Autorisierter Distributor

Current clamp for AC/DC current
Model E1N

Current	2 A AC/DC	150 A AC/DC
Output	1 mV/mA	1 mV/A

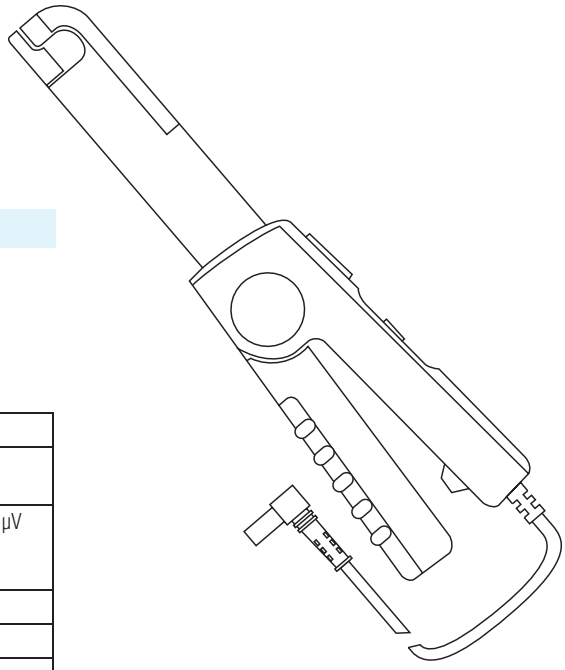

ELECTRICAL SPECIFICATIONS

- **Current range:**
  50 mA .. 150 A AC/DC over two calibres
- **Output signal:**
  1 mV/mA and 1 mV/A AC or DC
- **Accuracy and phase shift (1):**

Calibre	1 mV/mA (1 V/A)	1 mV/A
Current range	50 mA .. 2 A DC 50 mA .. 1.5 A AC	500 mA .. 150 A
Accuracy in % of output signal	2 % ± 20 mV	500 mA .. 100 A AC/DC: 1.5 % ± 30 µV 100 A .. 150 A DC: 3 % 100 A .. 120 A AC: 3 %
Frequency range	DC .. 65 Hz: 3°	DC .. 65 Hz: 1°
Phase shift	not specified	not specified
Load impedance minutes	≥ 10 kΩ	≥ 2 kΩ
Noise	DC .. 1 Hz: 3 mV 1 Hz .. 10 kHz: 10 mV 10 kHz .. 100 kHz: 18 mV	DC .. 1 Hz: 3 µV 1 Hz .. 10 kHz: 10 µV 10 kHz .. 100 kHz: 18 µV

- **Operating voltage:**
  600 V RMS max
- **Common mode voltage:**
  600 V RMS max
- **Battery:**
  9 V alkaline (NEDA 1604A, IEC 6LR61)
- **Battery life:**
  70 hours typical
- **Typical consumption:**
  6 mA
- **Battery level indicator:**
  Green LED when > 6.5 V

MECHANICAL SPECIFICATIONS

- **Operating temperature:**
  0° to +50 °C
- **Storage temperature:**
  -30 °C to +80 °C
- **Influence of temperature:**
  < 0.2 % per °C
- **Relative humidity for operation:**
  +10 °C to +30 °C:
  85 ± 5 % RH (without condensation)
  +40 °C to +50 °C:
  45 ± 5 % RH (without condensation)
- **Operating altitude:**
  0 to 2,000 m
- **Max. jaw insertion capacity:**
  11.8 mm
- **Zero adjustment:**
  20 turns of potentiometer (± 1.5 A minutes)
- **Drop test:**
  1 m on a 38 mm container of oak on concrete, test in accordance with IEC 1010
- **Shock resistance:**
  100 g, in accordance with IEC 68-2-27
- **Vibration resistance:**
  10/55/10 Hz, 0.15 mm
  test in accordance with IEC 68-2-6
- **Casing protection rating:**
  IP20 in accordance with IEC 529
- **Self-extinguishing capability:**
  Casing: UL94 V2
- **Dimensions:**
  231 x 36 x 67 mm
- **Weight:**
  330 g with batteries
- **Colour:**
  Dark grey
- **Output:**
  1.5 m two-wire lead with double or reinforced insulation terminated by 2 elbowed male safety plugs (4 mm)

SAFETY SPECIFICATIONS

- **Electrical safety:**
  600 V category III, pollution 2
  300 V category IV, pollution 2
- **Electromagnetic compatibility (EMC):**
  EN 50081-1: class B
  EN 50082-2:
  - Electrical discharge IEC 1000-4-2
  - Radiated field IEC 1000-4-3
  - Fast transients IEC 1000-4-4
  - Magnetic field at 50/60 Hz: IEC 1000-4-8

(1) Conditions of reference: 23 °C ±5°K, 20 to 75 % RH, 48 to 65 Hz, external magnetic field < 40 A/m, no current-carrying conductor nearby, centred test sample, load impedance 1 MΩ.

To order	Reference
AC current clamp/DC model **E1N** with battery and user's manual	P01120030A

Oscilloscope clamp for AC/DC current

Model E3N (insulated AC current probe/DC)

Current	10 A peak	100 A peak
Output	100 mV/A	10 mV / A

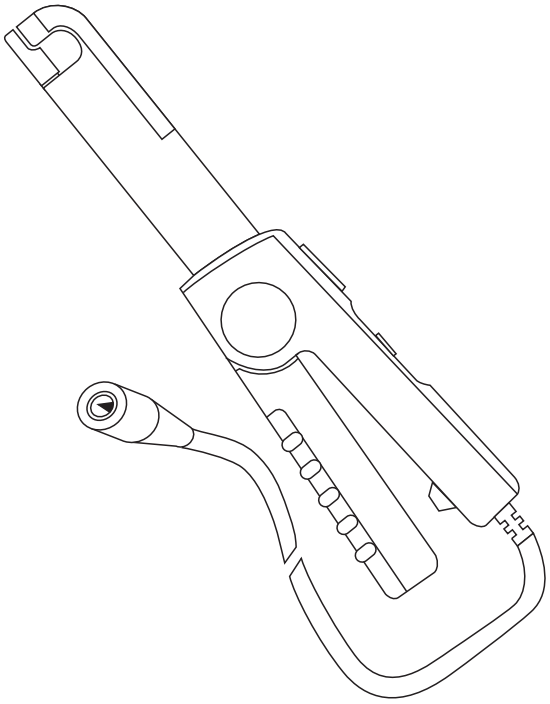

DESCRIPTION

The E3N clamp is designed to measure AC and DC currents by using Hall-effect technology. Its narrow, elongated shape makes it ideal for measurements in cable bundles or in confined spaces such as the wiring on switchboards, motor control units and electrical circuits on motor vehicles. It is particularly appreciated for its True RMS measurements on AC+DC signals. It offers 2 different sensitivities.

ELECTRICAL SPECIFICATIONS

- **Current range:**
  0.1 A .. 10 A peak
  0.5 A .. 100 A peak
- **Output signal:**
  100 mV AC+DC / A AC+DC (1 V for 10 A)
  10 mV AC+DC / A AC+DC (1 V for 100 A)
- **Accuracy and phase shift (1):**

Calibre	10 A	100 A	
Current range	100 mA .. 10 A peak	500 mA .. 40 A peak	40 A .. 100 A peak
% Accuracy of output signal	≤ 3 % + 5 mV	≤ 4 % + 500 µV	≤ 15 %
Phase shift	≤ 1.5°	≤ 1°	≤ 1°

- **Bandwidth:**
  DC .. 100 kHz (-3 dB) (depending on current value)
- **Rise/fall time from 10 % to 90 %:**
  10 A calibre: 3 µs
  100 A calibre: 4 µs
- **10 % delay time:**
  10 A calibre: 2,7 µs
  100 A calibre: 1,8 µs
- **Insertion impedance (at 10 kHz / 50 kHz):**
  < 1.3 mΩ / < 10 mΩ
- **DC zero adjustment:**
  20 turns of potentiometer
- **Typical output noise level (peak-peak) from DC to 100 kHz:**
  10 A calibre: 6 mV
  100 A calibre: 600 µV
- **Battery:**
  9 V alkaline (NEDA 1604A, IEC 6LR61)
- **Battery life:**
  55 hours typical
- **Typical consumption:**
  8.6 mA typical / 12 mA max.
- **Battery level indicator:**
  Green LED when > 6.5 V
- **Overload indication:**
  Red LED indicates the measured current is too high for the selected range
- **Influence of temperature:**
  ≤ 2,000 ppm /°C
- **Influence of conductor position in jaws:**
  ≤ 0.5 % of output signal at 1 kHz
- **Common mode voltage (600 V max) for AC measurements (typical/max):**
  10 A calibre:
  At 50 Hz: 3.48 mA/100 V / 5 mA/100 V
  At 400 Hz: 25.91 mA/100 V / 50 mA/100 V
  100 A calibre: no measurement

MECHANICAL SPECIFICATIONS

- **Clamping capacity:**
  Cable: Ø max 11.8 mm
- **Output:**
  Via 2 m coaxial cable terminated by BNC insulated plug
- **Dimensions:**
  231 x 67 x 36 mm
- **Weight:**
  330 g with battery
- **Operating temperature:**
  0° à +50°C
- **Storage temperature:**
  -30 °C to +80 °C
- **Relative humidity for operation:**
  0 to 85 % RH with a linear decrease above 35°C
- **Operating altitude:**
  0 to 2,000 m
- **Casing protection rating:**
  IP20 (IEC 529)
- **Drop test:**
  1 m (IEC 68-2-32)
- **Shock resistance:**
  100 g / 6 ms / half-periode (IEC 68-2-27)
- **Vibration resistance:**
  10/55/10 Hz, 0.15 mm (IEC 68-2-6)
- **Self-extinguishing capability:**
  UL94 V2
- **Colour:**
  Dark grey

SAFETY SPECIFICATIONS

- **Electrical safety:**
  Instrument with double insulation or reinforced insulation between the primary the secondary and the grippable part located under the guard as per IEC 1010-1 & IEC 1010-2-032
  - 600 V category III, pollution degree 2
  - 300 V category IV, pollution degree 2
- **Electromagnetic compatibility (EMC):**
  EN 50081-1: class B
  EN 50082-2:
  - Electrostatic discharge IEC 1000-4-2:
    4 kV level 2 performance criterion B
    8 kV in the air level 3 performance criterion B
  - Radiated field IEC 1000-4-3:
    10 V/m performance criterion A
  - Fast transients IEC 1000-4-4:
    1 kV level 2 performance criterion B
    2 kV level 3 performance criterion B
  - Magnetic field at the network frequency (IEC 1000-4-8):
    field of 400 A/m at 50 Hz: < 1 A

TVW Meßtechnik GmbH
TVW-App
Autorisierter Distributor

CURVES

100 A calibre

Linearity with DC

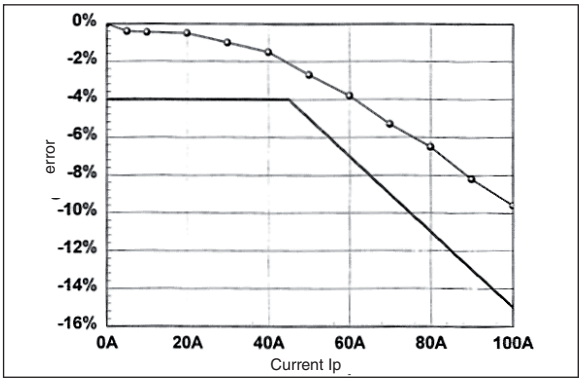

Frequency response

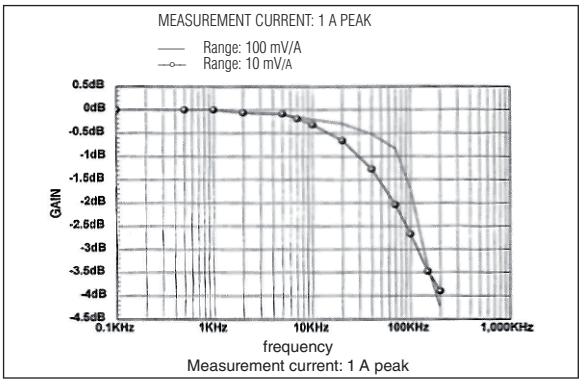

Phase shift

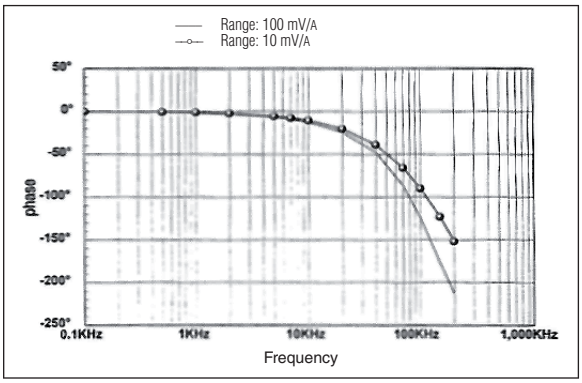

Immunity regarding an external conductor

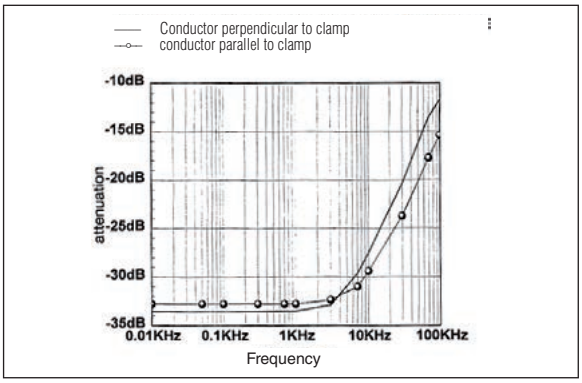

Limitation of measurable current according to the frequency

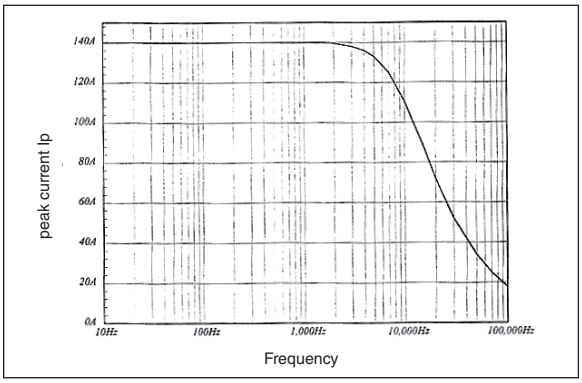

TVW Meßtechnik GmbH
TVW-App
Autorisierter Distributor

CURVES

100 A calibre

1 A peak

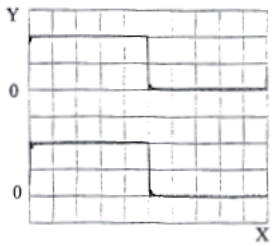

Input signal:
X: 1 ms/div
Y: 0.5 V/div

Clamp output signal
X: 1 ms/div
Y: 50 mV/div

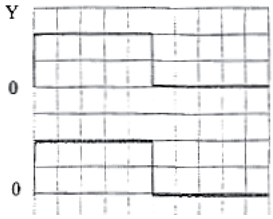

Input signal:
X: 0.1 ms/div
Y: 0.5 V/div

Clamp output signal
X: 0.1 ms/div
Y: 50 mV/div

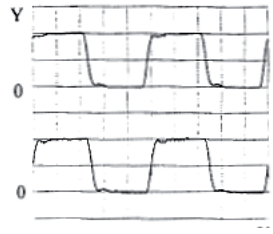

Input signal:
X: 20 µs/div
Y: 0.5 V/div

Clamp output signal
X: 20 µs/div
Y: 50 mV/div

2 A peak

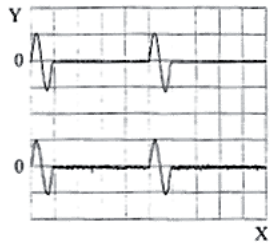

Input signal:
X: 2 ms/div
Y: 0.2 V/div

Clamp output signal
X: 2 ms/div
Y: 200 mV/div

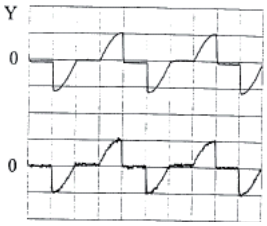

Input signal:
X: 5 ms/div
Y: 0.2 V/div

Clamp output signal
X: 5 ms/div
Y: 200 mV/div

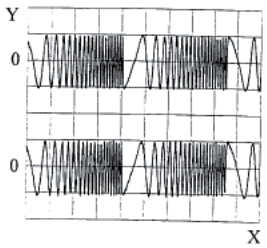

Input signal:
X: 5 ms/div
Y: 0.2 V/div

Clamp output signal
X: 5 ms/div
Y: 200 mV/div

0.1 A peak

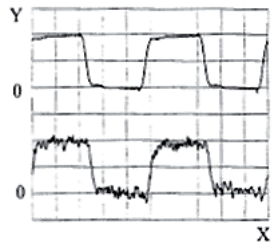

Input signal:
X: 20 µs /div
Y: 50 mV/div

Clamp output signal
X: 20 µs/div
Y: 5 mV/div

TVW Meßtechnik GmbH
TVW-App
Autorisierter Distributor

CURVES

10 A calibre

10 A peak

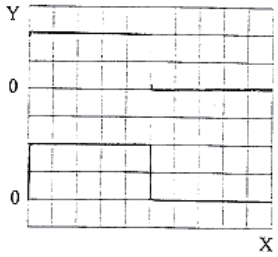

Input signal:
X: 1 ms/div
Y: 0.5 V/div

Clamp output signal
X: 1 ms/div
Y: 50 mV/div

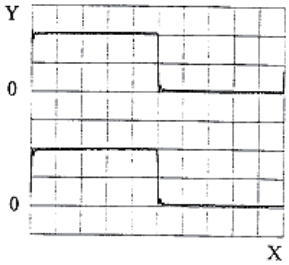

Input signal:
X: 0.1 ms/div
Y: 0.5 V/div

Clamp output signal
X: 0.1 ms/div
Y: 50 mV/div

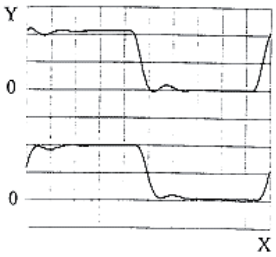

Input signal:
X: 10 µs/div
Y: 0.5 V/div

Clamp output signal
X: 10 µs/div
Y: 50 mV/div

Insertion impedance

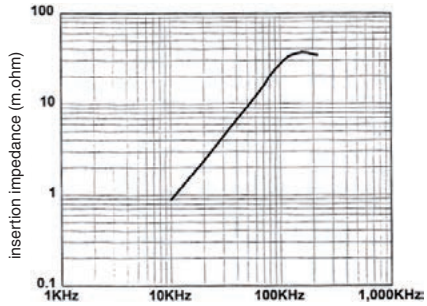

(1) Conditions of reference: 23 °C ± 5 °K, 20 % to 75 % RH, power supply voltage 8 V ± 0.1 V DC sinusoidal signal with frequency of DC to 1 kHz, external magnetic field < 40 A/m, no DC components, no external conductor with circulating current, conductor centred for measurement, load impedance >1 MΩ / < 100 pF.

To order	Reference
AC/DC current clamp model **E3N** for oscilloscope, with battery and user's manual	P01120043A
AC/DC current clamp model **E3N** for oscilloscope, with mains power, battery and user's manual	P01120047

Current clamp for AC/DC current
Model E6N

Calibre	2 A AC/DC	80 A AC/DC
Output	1 mV/mA	10 mV/A

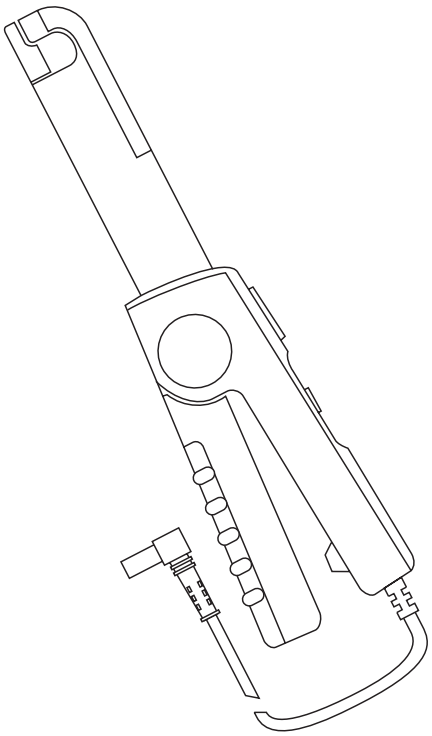

ELECTRICAL SPECIFICATIONS

- **Current range:**
  5 mA .. 80 A AC/DC over two calibres
- **Output signal:**
  1 mV/mA and 10 mV/A AC or DC
- **Accuracy and phase shift** (1):

Calibre	1 mV/mA (1 V/A)	10 mV/A
Current range	5 mA .. 2 A DC 5 mA .. 1.5 A AC	20 mA .. 80 A DC 20 mA .. 80 A AC
% Accuracy of output signal	2 % ± 5 mV	20 mA .. 50 A DC: 4 % ± 200 µV 50 A to 80 A DC: 12 % 20 mA .. 40 A AC: 4 % ± 200 µV 40 A to 60 A AC: 12 %
Frequency range	DC .. 2 kHz	DC .. 8 kHz
Phase shift	DC .. 65 Hz: 1°	DC .. 65 Hz: 1°
Load impedance minutes	> 10 kΩ	> 2 kΩ
Noise	DC .. 1 Hz: 2 mV 1 Hz .. 10 kHz: 10 mV 10 .. 100 kHz: 10 mV	DC .. 1 Hz: 20 µV 1 Hz .. 10 kHz: 100 µV 10 .. 100 kHz: 100 µV

- **Overload:**
  120 A continuous
- **Operating voltage:**
  600 VRMS max
- **Common mode voltage:**
  600 VRMS max
- **Battery:**
  9 V alkaline (NEDA 1604A, IEC 6LR61)
- **Battery life:**
  70 hours typical
- **Typical consumption:**
  6 mA
- **Battery level indicator:**
  Green LED when > 6.5 V

MECHANICAL SPECIFICATIONS

- **Operating temperature:**
  0 °C to +50 °C
- **Storage temperature:**
  -30 °C to +80 °C
- **Influence of temperature:**
  < 0.2 % per °C
- **Relative humidity for operation:**
  +10° to +30 °C:
  85 ± 5 % RH (without condensation)
  +40 °C to +50 °C:
  45 ± 5 % RH (without condensation)
- **Operating altitude:**
  0 to 2,000 m
- **Max. jaw insertion capacity:**
  11.8 mm
- **Zero adjustment:**
  20 turns of potentiometer (± 1.5 A minutes)
- **Drop test:**
  1 m on a 38 mm container of oak on concrete, test in accordance with IEC 1010
- **Shock resistance:**
  100 g, in accordance with IEC 68-2-27
- **Vibration resistance:**
  10/55/10 Hz, 0.15 mm
  test in accordance with IEC 68-2-6
- **Casing protection rating:**
  IP20 in accordance with IEC 529
- **Self-extinguishing capability:**
  Casing: UL94 V2
- **Dimensions:**
  231 x 36 x 67 mm
- **Weight:**
  330 g with batteries
- **Colour:**
  Dark grey
- **Output:**
  1.5 m two-wire lead with double or reinforced insulation terminated by 2 elbowed male safety plugs (4 mm)

SAFETY SPECIFICATIONS

- **Electrical safety:**
  600 V category III, pollution: 2
  300 V category IV, pollution: 2
- **Electromagnetic compatibility (EMC):**
  EN 50081-1: class B
  EN 50082-2:
  - Electrical discharge IEC 1000-4-2
  - Radiated field IEC 1000-4-3
  - Fast transients IEC 1000-4-4
  - Magnetic field at 50/60 Hz IEC 1000-4-8

(1) Conditions of reference: 23 °C ±5°K, 20 to 75 % RH, 48 to 65 Hz, external magnetic field < 40 A/m, no current-carrying conductor nearby, centred test sample, load impedance 1 MΩ

To order	Reference
AC current clamp/DC model **E6N** with battery and user's manual	P01120040A